ISSN 2395-1621

Design and Development of Arduino Based Gesture Controlled Robotic Arm.

#1B.S.Suryavanshi, #2Prof.Dr.S.R.Patil.

#1AMGOI, Vathar, India.

ABSTRACT

In today's world, in almost all sectors, most of the work is done by robots or robotic arm having different number of degree of freedoms (DOF's) as per the requirement. This paper deals with the Design and Implementation of a "Design and Development of Arduino Based Gesture Controlled Robotic Arm." The system design is divided into 3 parts namely: Accelerometer Part, Robotic Arm and Platform. It is basically an Accelerometer based system which controls a Robotic Arm wirelessly using a, small and low-cost, 3-axis (DOF's) accelerometer via wireless module. The Robotic Arm is mounted over a movable platform which is also controlled wirelessly by another accelerometer. One accelerometer is mounted / attached on the human hand, capturing its behaviour (gestures and postures) and thus the robotic arm moves accordingly and the other accelerometer is mounted on any of the leg of the user / operator, capturing its gestures and postures and thus the platform moves accordingly. In a nutshell, the robotic arm and platform is synchronised with the gestures and postures of the hand and leg of the user / operator, respectively. The different motions performed by robotic arm are: PICK and PLACE / DROP, RAISING and LOWERING the objects. Also, the motions performed by the platform are: FORWARD, BACKWARD, RIGHT and LEFT.

ARTICLE INFO

Article History

Received :30th December 2015

Received in revised form :

31st December 2015

Accepted :1st December , 2015

Published online :

2nd December 2015

Keywords—Accelerometer, DOF, wireless Module

I. INTRODUCTION

A robotic arm is a robot manipulator, which can perform similar functions to a human arm.

Robotic arms are the vital part of almost all the industries. In industries, a robotic arm performvarious different tasks such as welding, trimming, picking and placing etc. Moreover the biggest advantage of these arms is that it can work in hazardous areas and also in the areas which cannot be accessed by human.

For example in NASA's mission to Mars, the Spirit and Opportunity drone. It is also used to implement highly precise medical treatments etc. Many variants of these robots/robotic are available or designed as per the requirement. Few variants are Keypad Controlled, Voice Control, Gesture Control, etc. However, most of the industrial robots are still programmed using the typical teaching process which is still a tedious and time-consuming task that requires technical expertise. Therefore, there is a need for new and easier ways for programming the robots.

In this paper, the gesture based system (using Accelerometer) [1] [2] has been incorporated to control the robotic arm as well as its platform using two, small and low-cost, 3-axis accelerometers.

The prime aim of the design is that the robot and platform starts the movement as soon as the operator makes a gesture or posture or any motion. The Robotic arm is synchronized with the gestures (hand postures) of the operator and the platform part is synchronized with the gestures (leg postures) of the operator.

The goal of this paper is to develop methodologies that help users to control and program a robot, with a high-level of abstraction from the robot specific language i.e. to simplify the robot programming.

II. LITERATURE REVIEW

Aggarwal Love et.al [2]: Aggarwal Love et.al proposed a system which is divided into 3 parts namely: Accelerometer Part, Robotic Arm and Platform. It is basically an Accelerometer based system which controls a Robotic Arm

wirelessly using a, small and low-cost, 3-axis (DOF"s) accelerometer via wirelessly.

Maruthi Sagar N.V.et.al [4]: In the paper published by Maruthi Sagar et.at describes robustness of MEMS based Gesture Controlled Robot is a kind of robot that can be by our hand gestures rather than an ordinary old switches or keypad. In Future there is a chance of making robots that can interact with humans in an natural manner. Hence the target interest is with hand motion based gesture interfaces.

Shokur Solaiman et.al [1]: In article describes an attempt to build a robot able to locate and follow a human target moving in a domestic environment. After a brief review of the state of the art in relative location technologies, They described their approach that aims to develop robots provided with simple and robust relative location technologies that do not require to structure the environment and on simple semi-reactive strategies that does not require the use of internal maps and the ability to self-localize.

Nakamoto Hideichiet.al [6]: The person following robot ApriAttendaTM equipped with a stereo camera and Vision System and LRF is introduced. ApriAttendaTM has the Vision-Based Tracking system and the Vision-Based Motion Control system. ApriAttendaTM can do the person following motion using the tracking information. Moreover, ApriAttendaTM used LRF as another sensor for the tracking performance gain. The respective problems of the vision and LRF tracking systems are pointed out and an improvement method based on the idea of the Vision-LRF Sensor Fusion system is proposed.

III. SYSTEM DESIGN

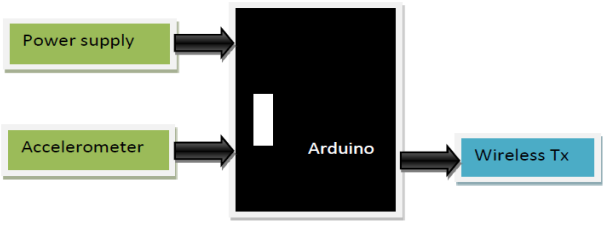

Fig.1 Transmitter

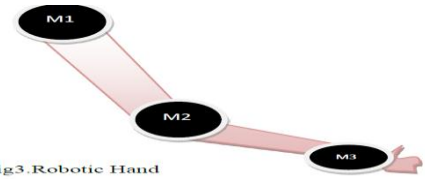

Fig3.Robotic Hand

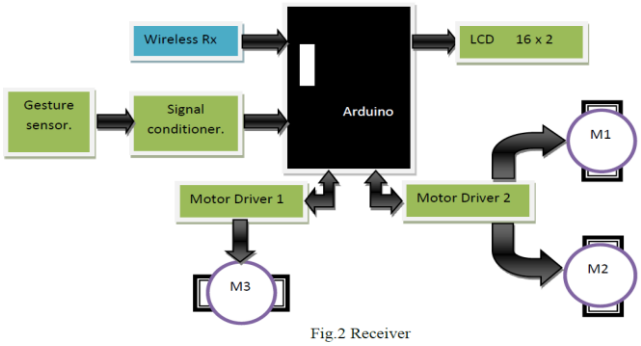

Fig.2 Receiver

The proposed system consist of accelerometer ,robotic arm, platform. The aim of the project is to design a robotic arm which work according to gesture and posture of human. The heart of entire system is Arduino based open source software platform which contains AVR based microcontroller system. The accelerometer and flex sensors output processed by signal conditioner and it is given to microcontroller. Software algorithm is depend on gesture of human and output given to the wireless module. At the receiver end the data is demodulated and processed by another microcontroller and actions are taken.

Microcontroller: The microcontroller is used as the hardware platform. It is the controlling unit, to which all other components (Accelerometers, Motors, RF modules etc.) are interfaced. Two such microcontrollers are used in this project, one at the Transmitting end and one at the Receiving end.

Accelerometer: An accelerometer measures gravitational force or acceleration. By tilting an accelerometer along its measured axis, one can read the gravitational force relative to the amount of tilt. Most accelerometers available today are small surface mount components, so you can easily interface them to a microcontroller. There are three axes that can be measured by an accelerometer and they are labeled as X, Y and Z.

Wireless module: This module consists of further two parts: Transmitter (Tx) and Receiver (Rx). It is available in different operating frequencies with different operating range. An Encoder Circuit and a Decoder Circuit is used along with the Transmitter and Receiver respectively in order to transmit and receive the message/signal.

Robotic Arm: This is the vital part of the system as it is this part which does the Pick and Drop task of the project. The robotic arm is equipped with a Gripper (for picking and placing the objects) and an Arm (for raising and lowering the objects), Both the Arm and Gripper are equipped with Motor to control the movement. These movements are synchronized with the hand gestures of the user, operating the Robotic Arm.

IV. CONCLUSION

The proposed system focuses on the design and development of the robotic arm.in this system the moment of the target object are captured by the accelerometer and the flex sensors. all these gestures and postures are taken by the these sensors and wirelessly transmitted to the robotic arm according to that this robotic arm acts same as the human.

REFERENCES

[1] Neto Pedro et.al, "Accelerometer-Based Control of an Industrial Robotic Arm "available at: http://arxiv.org/ftp/arxiv/papers/1309.

[2] Aggarwal Love et.al, "Design and Implementation of a Wireless Gesture Controlled Robotic Arm with Vision", International Journal of Computer Applications (0975 – 8887) Volume 79 – No 13, October 2

[3] Dr. Dharaskar R. V.et.al,"Robotic Arm Control Using Gesture and Voice", In International Journal of Computer, Information Technology & Bioinformatics(IJCITB), Vol. 1, Issue 1 pp. 41-46

[4]MaruthiSagar N.V.et.al „„MEMS Based Gesture Controlled Robot Using Wireless Communication" International Journal of Engineering Trends and Technology (IJETT) – Volume 14 Number 4 – Aug 2014

[5] W. C. Bang et al. (2004), "Inertial sensor based recognition of 3-D character gestures with an ensemble of classifiers," presented at the 9th Int. Workshop on Frontiers in Handwriting Recognition.

[6] Nakamoto Hideichi et.al "Person Following Robot with Vision-based and Sensor Fusion Tracking Algorithm" ISBN 978-953-7619-21-3, pp. 538, November 2008,

[7] Dr. Dixit Shantanu K. et.al „„Implementation of Flex sensor and Electronic Compass for Hand Gesture Based Wireless Automation of Material Handling Robot""" International Journal of Scientific and Research Publications, Volume 2, Issue 12, December 2012

